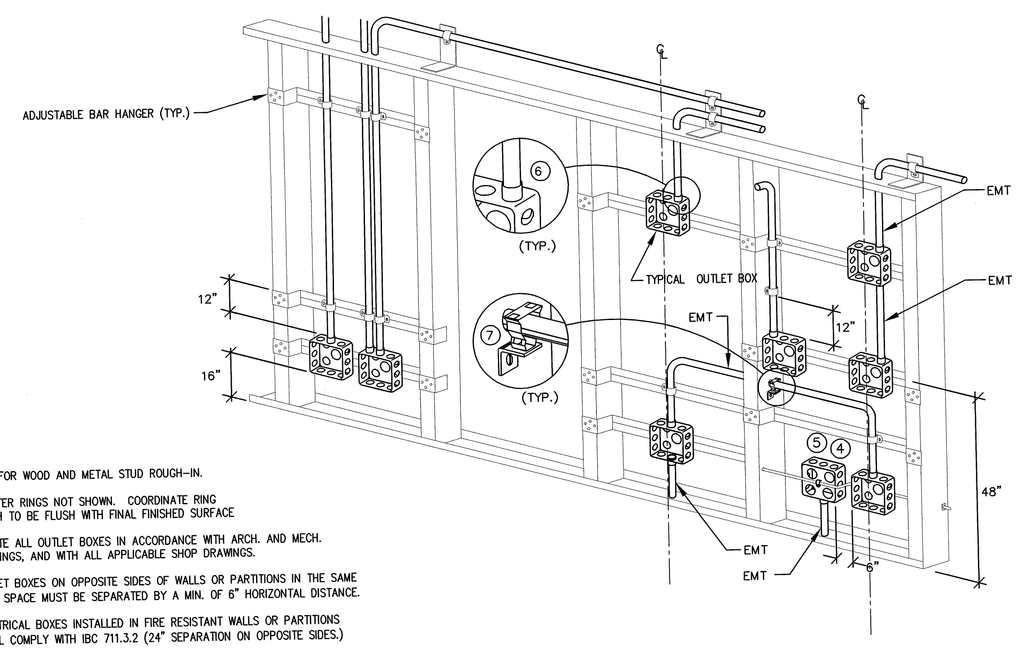

NOTES:

1. TYP. FOR WOOD AND METAL STUD ROUGH-IN.
2. PLASTER RINGS NOT SHOWN. COORDINATE RING DEPTH TO BE FLUSH WITH FINAL FINISHED SURFACE
3. LOCATE ALL OUTLET BOXES IN ACCORDANCE WITH ARCH. AND MECH. DRAWINGS, AND WITH ALL APPLICABLE SHOP DRAWINGS.
4. OUTLET BOXES ON OPPOSITE SIDES OF WALLS OR PARTITIONS IN THE SAME STUD SPACE MUST BE SEPARATED BY A MIN. OF 6" HORIZONTAL DISTANCE.
5. ELECTRICAL BOXES INSTALLED IN FIRE RESISTANT WALLS OR PARTITIONS SHALL COMPLY WITH IBC 711.3.2 (24" SEPARATION ON OPPOSITE SIDES.)
6. INSULATED THROAT EMT CONNECTOR.
7. CADDY FASTENER, THROUGH STUD CABLE/CONDUIT SUPPORT 'FB12P'.

1 / E3.1 TYP. ROUGH IN DETAIL
NO SCALE

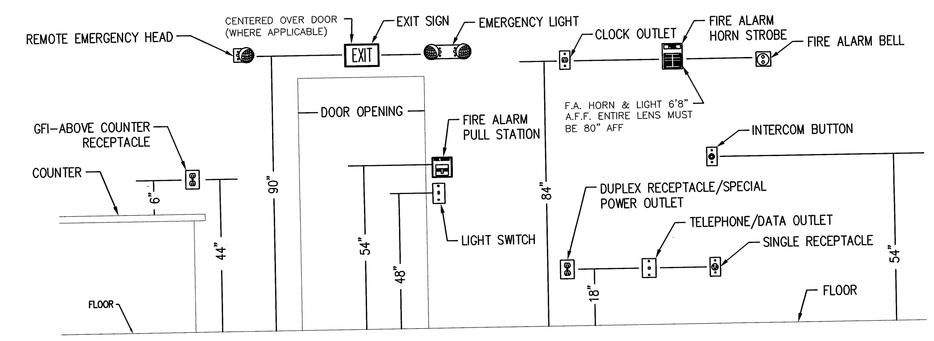

2 / E3.1 MOUNTING HEIGHT DETAIL
NO SCALE

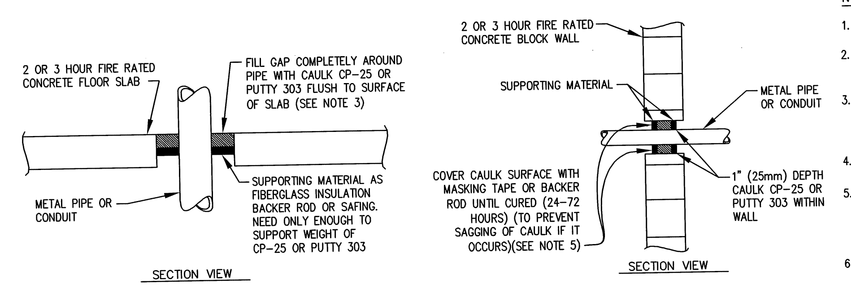

NOTES:

1. FOR CONCRETE BLOCK WALLS, CENTER CAULK CP-25 OR PUTTY 303 WITHIN WALL WITH DAMMING ON BOTH SIDES.
2. RECOMMENDATIONS BASED ON PRODUCT PERFORMANCE PER ASTM E-814 (UL 1479) FIRE TEST AND UL CLASSIFI-CATION FIRE STOP SYSTEMS 49, 33 AND 91.
3. WET INSTALLED DEPTH OF CAULK CP-25 OR PUTTY 303 DEPENDS ON TYPE AND SIZE OF PIPE: WET DEPTH PIPE SIZE FIRE RATING 1/2" (13mm) MAX. 8" (203mm) 2 HRS. 2" (25mm) MAX. 6" (152mm) 3 HRS.
4. UP TO 40% SHRINKAGE OF CP-25 OR PUTTY 303 IS ACCEPTABLE AFTER WET DEPTH INSTALLATION.
5. OPTIONS TO MASKING TAPE TO PREVENT SAGGING: A. INSTALL ADDITIONAL DAMMING MATERIAL OVER PRODUCT TO HOLD WITHIN OPENING. B. REMOVE PRODUCT FROM CONTAINER AND ALLOW TO AIR CURE IN SMALL BATCHES FOR 12 HRS. THEN HAND FORM INTO OPENING.
6. WHEN ANNULAR SPACE EXCEEDS 3/4" (19mm), A 28 AWG METAL COVER PLATE MUST BE MECHANICALLY SECURED ATOP THE 3M FIRE BARRIER APPLICATION, OR TIGHTLY PACK A NON-COMBUSTIBLE DAMMING MATERIAL ATOP INSTALLED CAULK OR PUTTY.

3 / E3.1 TYP. FIRE STOP DETAIL
NO SCALE

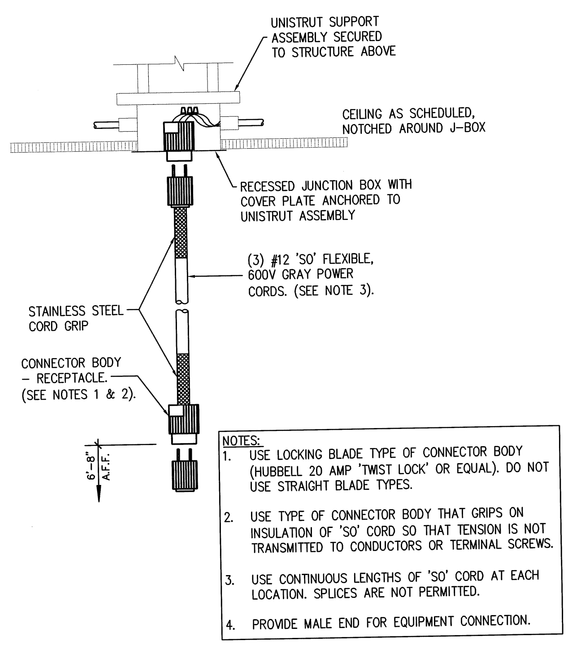

NOTES:

1. USE LOCKING BLADE TYPE OF CONNECTOR BODY (HUBBELL 20 AMP 'TWIST LOCK' OR EQUAL). DO NOT USE STRAIGHT BLADE TYPES.
2. USE TYPE OF CONNECTOR BODY THAT GRIPS ON INSULATION OF 'SO' CORD SO THAT TENSION IS NOT TRANSMITTED TO CONDUCTORS OR TERMINAL SCREWS.
3. USE CONTINUOUS LENGTHS OF 'SO' CORD AT EACH LOCATION. SPLICES ARE NOT PERMITTED.
4. PROVIDE MALE END FOR EQUIPMENT CONNECTION.

4 / E3.1 TWIST LOCK CORD DROP
NO SCALE

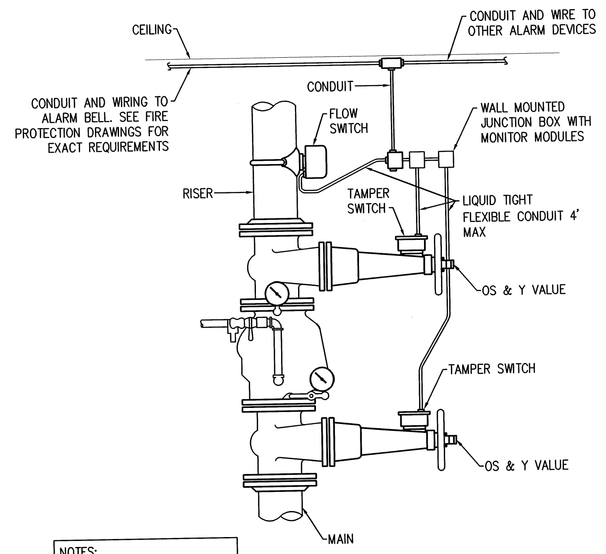

NOTES:
FLOW AND TAMPER SWITCHES ARE PROVIDED AND INSTALLED BY SPRINKLER CONTRACTOR. WIRED BY ELECTRICAL CONTRACTOR.

5 / E3.1 FIRE SPRINKLER RISER CONNECTION
NO SCALE

NOTES:
(1) PROVIDE PULL CORDS IN ALL EMPTY RACEWAYS.

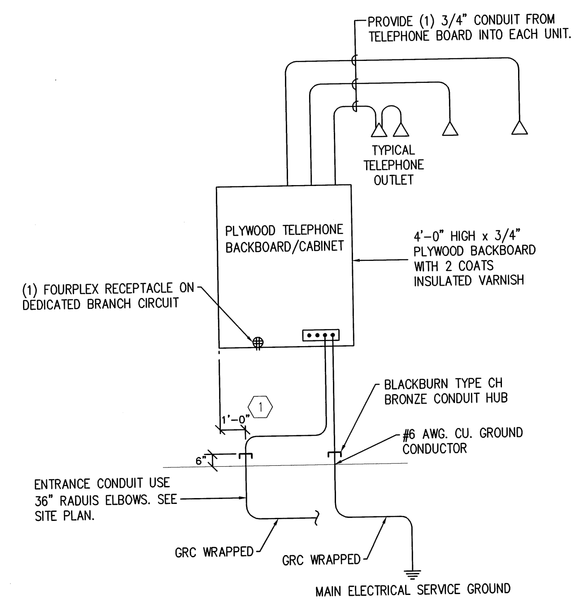

6 / E3.1 TELEPHONE RACEWAY DIAGRAM
NO SCALE

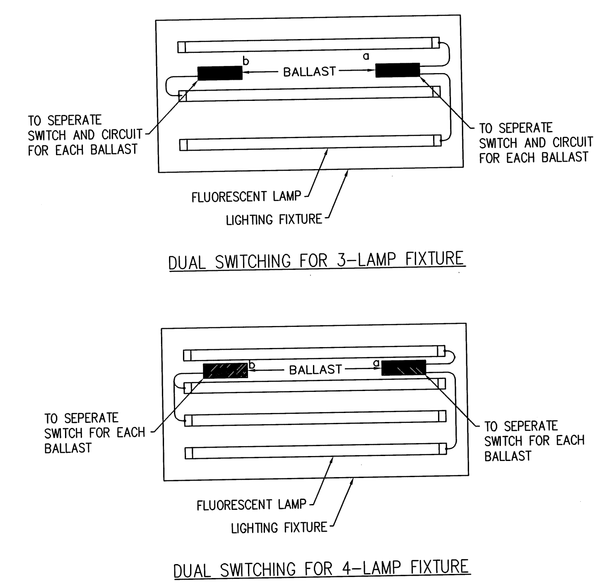

7 / E3.1 DUAL SWITCHING FOR FLUORESCENT FIXTURE
NO SCALE

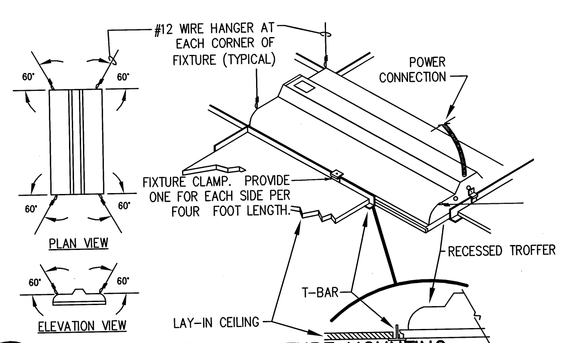

8 / E3.1 TYPICAL RECESSED FIXTURE MOUNTING
NO SCALE

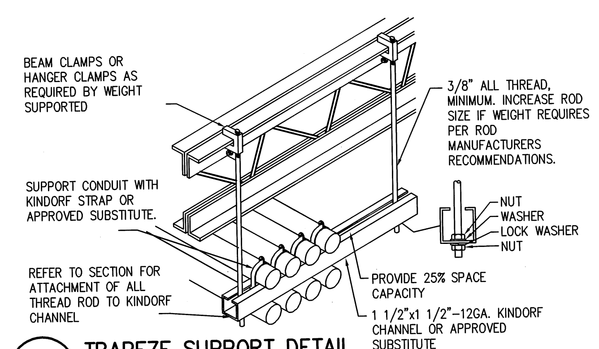

9 / E3.1 TRAPEZE SUPPORT DETAIL
NO SCALE

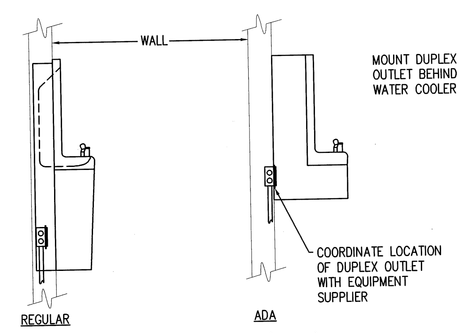

10 / E3.1 ELECTRIC WATER COOLER (EWC)
NO SCALE

Western Design Group, Inc.
Architecture
2 West St. George Blvd.
Suite 200 P.O. Box 1
St. George Utah 84770
435/656.1312 Fax 656.1355
www.westernDesigninc.net

CONSULTANTS

VAN BOERUM & FRANK ASSOCIATES INC.
CONSULTING ENGINEERS
WWW.VBFA.COM
Salt Lake City · Logan · St. George · Tempe · Pocatello
1070 W 1600 S, Ste. #104 435.674.4800 T
St. George, UT 84770 435.674.2708 F
VBFA Project Number:8108

LICENSED PROFESSIONAL ENGINEER
No. 353492
LADD M. BIRCH
06-06-08
STATE OF UTAH

PAINTER'S SERVICE CENTER

1600 HILTON DR.
ST. GEORGE, UTAH 84770

JIM PAINTER

MARK	DATE	DESCRIPTION
CD		
PP		
DD	/ /	

PROJECT NO:	VBFA-8108
MODEL FILE:	
DRAWN BY:	K.BEATTY
CHK'D BY:	L.REMBER

COPYRIGHT

SHEET TITLE
ELECTRICAL DETAILS

E3.1
SHEET OF

H:\08\08100\08108 Painters Sun Country Chrysler\Cad\Electrical\08108-E3-1.dwg, 6/6/2008 2:09:59 PM, Kalsk, ARCH expand E1 (30.00 x 42.00 Inches), 1:1